CIVIL DRAWINGS	
TRYLON DWG. NO.	DRAWING NAME
159737.319.0102	TITLE PAGE
159737.319.0301	TOWER PROFILE
159737.319.0302	DESIGN ANTENNA CHART
159737.319.0303	INITIAL ANTENNA CHART
159737.319.0304	Tx-LINE LAYOUT
159737.319.0401	COMPOUND LAYOUT
159737.319.0601	TOWER FOUNDATION – ELEV. VIEW
159737.319.0602	TOWER FOUNDATION – PLAN VIEW
159737.319.0603	REBAR CHARTS
159737.319.0604	FOUNDATION NOTES
159737.319.0605	WGB FOUNDATION
159737.319.0901	TEMPLATE ASSEMBLY
159737.319.1201	GROUNDING DETAILS
159737.319.1202	GROUNDING DETAILS
159737.319.1203	GROUNDING DETAILS
159737.319.1204	GROUND WIRE CUTTING CHART
159737.319.1205	GROUNDING NOTES
	BILL OF MATERIALS

JOB DESCRIPTION: 218.5' [66.6M] KDSS TOWER
SITE NAME: DEVONSHIRE PARISH, BERMUDA

TRYLON JOB NO.: 159737
CUSTOMER: GOVERNMENT OF BERMUDA

LATITUDE: 32.299186°
LONGITUDE: −64.765877°

NOTE: PROFESSIONAL ENGINEERING STAMP APPLIES ONLY TO THE DRAWINGS INCLUDED HEREIN.

Trylon

IN CASE OF EMERGENCY CALL:
519-669-5421 (DAYS)
1-877-572-9995 (EVENINGS AND WEEKENDS)

PAINT	1501&1502	1503	1504	1505	1506	1507	1508	1509	1510	1511	1512	1513
INSTALL DRAWING												
LEG (50W)	A	B	C	D	E	F	G	H	I	J	K	
DIAGONAL (44W)	M L	M L	W L	L S	U T	S P	T P					
HORIZONTAL (44W)	N	O	R	R	R	V	V		V	N	R	
SUB HORIZONTAL (44W)	N	R	R	R	R	V	V					
SUB DIAGONAL (44W)	O	R	R	R	R	V	V					
PLAN BRACE (44W)	P	O			R	V						
SECTION WT (lbs)	11551	6839	7038	4758	3906	3319	2756	2290	2021	1913	1266	675
LADDER WT (lbs)	235	215	215	215	215	215	215	215	215	215	215	97
Tx BRKT WT (lbs)	44	44	44	44	44	44	44	44	44	44	44	16
LOWER SPLICE WT (lbs)	491	445	352	340	333	374	198	186	130	80	67	67
TOTAL WT (lbs)	12321	7543	7649	5357	4498	3952	3213	2735	2410	2252	1592	855

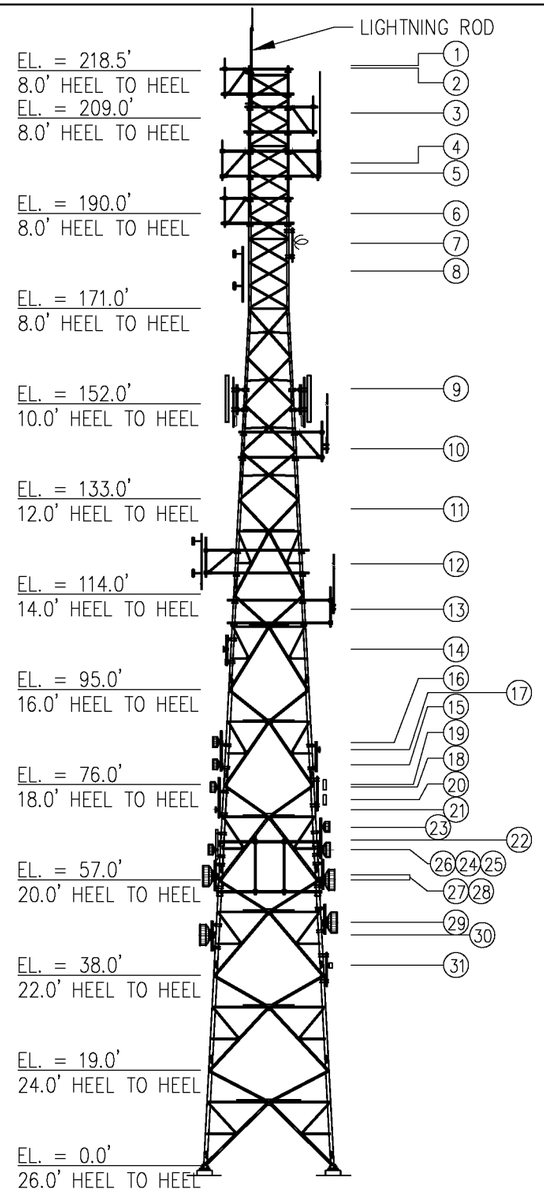

218.5' [66.6M] KDSS ANGLE LEG TOWER

MEMBERS LEGEND

A = V 8" x 8" x 1-1/8"
B = V 8" x 8" x 1"
C = V 8" x 8" x 7/8"
D = V 8" x 8" x 3/4"
E = V 8" x 8" x 5/8"
F = V 6" x 6" x 3/4"
G = V 6" x 6" x 5/8"
H = V 6" x 6" x 1/2"
I = V 5" x 5" x 1/2"
J = V 5" x 5" x 3/8"
K = V 4" x 4" x 5/16"
L = L 5" x 5" x 3/8" - 44W
M = L 4" x 4" x 5/16" B/B - 44W
N = L 3" x 3" x 1/4" - 44W
O = L 3" x 3" x 3/16" - 44W
P = L 3-1/2" x 3-1/2" x 1/4" - 44W
R = L 2-1/2" x 2-1/2" x 3/16" - 44W
S = L 4" x 4" x 5/16" - 44W
T = L 4" x 4" x 1/4" - 44W
U = L 4" x 4" x 3/8" - 44W
V = L 2" x 2" x 3/16" - 44W
W = L 5" x 5" x 5/8" B/B - 44W

TOWER DESIGNED TO SITE SPECIFIC:

DESIGN STANDARD: TIA-222-H
BASIC 3 SEC. GUST WIND SPEED: 160.0 (mph)
SERVICE WIND SPEED: 90.0 (mph)
BASIC ICE THICKNESS: 0.00 (in)
TOPOGRAPHIC CATEGORY: 3
EXPOSURE CATEGORY: C
IMPORTANCE CLASS: 3
HEIGHT OF CREST: 208 (feet)
ELEV. ABOVE SEA LEVEL: 208 (feet)
MAX. M/W ROTATION @ 90.0 (mph): 0.5°
LATITUDE: 32.299186°
LONGITUDE: -64.765877°
* DESIGN PARAMETERS PER CLIENT EMAIL RECEIVED 13-JUN-2019.
ELEVATION ABOVE SEA LEVEL & HEIGHT OF CREST FROM GOOGLE EARTH.

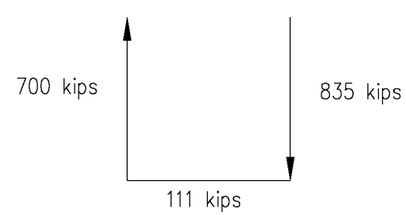

LEG FOUNDATION LOADS

(PER FOUNDATION)

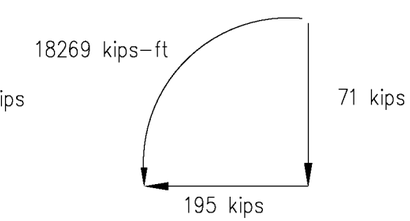

GLOBAL FOUNDATION LOADS

REV.	BY: REV.	BY: CHK.	DESCRIPTION	DATE
A	MA	PS	ISSUE FOR APPROVAL	20 FEB 20
B	HM	MA	ISSUE FOR CONSTRUCTION	05 MAY 20
C	ON	MP	REVISED LOADING	14 MAY 20

REFERENCE DRAWINGS:

DRAWING NUMBER	DRAWING NUMBER
0302	
0303	
0304	

NOTES:
1) FOUNDATION LOADS ARE FACTORED.
2) ANTENNA WEIGHTS ARE NOT INCLUDED IN THE TOWER SECTION WEIGHTS.
3) REFER TO DWG 0302 FOR DESIGN ANTENNA LOADING CHART.
4) REFER TO DWG 0303 FOR INITIAL ANTENNA LOADING CHART.
5) REFER TO DWG 0304 FOR TX-LINE LAYOUT.

Trylon

DRAWING NO. 159737.319.0301

CUSTOMER:	SITE:	SCALE:
GOV OF BERMUDA	DEVONSHIRE PARISH	370.000

DATE:	BY:	CHK:	APP:
20 FEB 20	MA	PS	ZA

TITLE: TOWER PROFILE

DESIGN ANTENNA LOADING CHART

Description	Qty	Elev. (m)	Elev. (ft)	Azimuth (°TN)	TX Line IN 3-ROWS	Qty	Owner	Status
L.Rod	1	67.1	220	0	3/8"OD	1	GOV	Design
6' Omni +Face Mount	1	66.9	219.5	0	7/8"OD	1	GOV	Design
4' Omni LegMounted	1	66.8	219	0	7/8"OD	1	GOV	Design
6' Omni +Face Mount	1	64	210	0	7/8"OD	1	GOV	Design
8' Omni +Face Mount	1	61	200	0	7/8"OD	1	ECL	Design
20' OMNI +Face Mount	1	60.4	198	0	7/8"OD	1	BMOC (VHF)	Design
Tetra AE3 Leg Mounted	1	57.9	190	0	3/8"OD	1	GOV	Design
JANPRO JLCP-1 FM +Leg Mount	1	56.1	184	0	1/2"OD	1	EMO	Design
2 BAY FM: 3'Tx2"W X 2'L	1	54.4	178.5	240	1-5/8"OD	1	IIC FM	Design
(**) Panel 72x12x6" Leg Mounted	3	47.2	155	0	1/2"OD	3	GOV	Design
20' Omni +Face Mount	1	43.6	143	0	7/8"OD	1	BMOC (VHF)	Design
PARAGRID: 18"Tx3'W LegMounted	1	39.9	131	275	1/2"OD	1	IIC FM	Design
2BAY FM: 2'Tx2'W X 2' L +12"StandOff	1	36.6	120	120	7/8"OD	1	IRIE FM	Design
20' Omni +Face Mount	1	33.8	111	0	7/8"OD	1	BMOC (VHF)	Design
1-ft MW +(1)ODU +12"StandOff	1	31.4	103	195	3/8"OD	1	CCS/BPS	Design
1-ft MW +(1)ODU +12"StandOff	1	25.3	83	15	3/8"OD	1	CCS/BPS	Design
2-ft MW +(1)ODU +12"StandOff	1	25.3	83	300	3/8"OD	1	CCS/BPS	Design
2-ft MW +(1)ODU +12"StandOff	1	24.4	80	300	3/8"OD	1	CCS/BPS	Design
2-ft MW +(1)ODU +12"StandOff	1	23.2	76	195	3/8"OD	1	CCS/BPS	Design
2-ft Panel +(1)ODU +12"StandOff	1	23.2	76	315	3/8"OD	1	CCS/BPS	Design
2-ft Panel +(1)ODU +12"StandOff	1	22.3	73	50	3/8"OD	1	CCS/BPS	Design
1-ft MW +(1)ODU +12"StandOff	1	21.6	71	235	3/8"OD	1	CCS/BPS	Design
Y4503 +Leg Mount	1	19.8	65	0	1/2"OD	1	EMO	Design
2-ft MW +(1)ODU +12"StandOff	1	19.2	63	0	1/2"OD	1	GOV	Design
VHLP3-6W-DW1 +(2)ODU	1	19.2	63	315	3/8"OD	2	CCS/BPS	Design
VHLP4-6W-DW1C +(2)ODU	1	19.2	63	50	3/8"OD	2	CCS/BPS	Design
2-ft MW +(1)ODU +12"StandOff	1	18.3	60	0	1/2"OD	1	GOV	Design
VHLP4-6W-DW1C +(2)ODU	1	17.7	58	235	3/8"OD	2	CCS/BPS	Design
VHLP4-6W-DW1C +(2)ODU	1	17.7	58	50	3/8"OD	2	CCS/BPS	Design
3-ft MW +(1)ODU +12"StandOff	1	14.8	48.5	50	3/8"OD	1	BMOC	Design
3-ft MW +(1)ODU +12"StandOff	1	14	46	235	3/8"OD	1	BMOC	Design
1-ft Sqr Panel +12"StandOff	1	12.2	40	0	3/8"OD	1	ECL	Design

(**) Panel 72x12x6" ASSUMED

STATUS: E-EXISTING, F-FUTURE, I-INITIAL, P-PROPOSED

NOTES:

REV.	BY: REV.	BY: CHK.	DESCRIPTION	DATE
A	MA	PS	ISSUE FOR APPROVAL	20 FEB 20
B	HM	MA	ISSUE FOR CONSTRUCTION	05 MAY 20

REFERENCE DRAWINGS:

DRAWING NUMBER	DRAWING NUMBER

Trylon

DRAWING NO. 159737.319.0302

CUSTOMER: GOV OF BERMUDA | SITE: DEVONSHIRE PARISH | SCALE: 1.000

DATE: 20 FEB 20 | BY: MA | CHK: PS | APP: ZA

TITLE: DESIGN ANTENNA CHART

ITEM No.	ANTENNA							Tx. LINE		TIE IN SITE	OWNER
	QTY.	MAKE AND MODEL OF ANTENNA	ELEVATION (ft.)	ELEVATION (m)	AZIMUTH (°TN)	DOWN TILT (E/M°)	STATUS	QTY.	DESCRIPTION		
1	1	6' Omni +Face Mount	219.5	66.9	OMNI	TBD	INITIAL	1	TBD	–	GOV
2	1	TETRA AE1 + FACE Mounted	220	67.0	180	TBD	INITIAL	1	TBD	–	GOV
3	1	TETRA AE2 + Face Mount	210	64	90	TBD	INITIAL	1	TBD	–	GOV
4	1	TETRA 8' WHIP + Face Mount	200	61	180	TBD	INITIAL	1	TBD	–	ECL
5	1	20' OMNI + Face Mount	198	60.4	OMNI	TBD	INITIAL	1	7/8"OD	–	BMOC
6	1	Tetra AE3 Leg Mounted	190	57.9	270	TBD	INITIAL	1	3/8"OD	–	EMO
7	1	JAMPRO JLCP-1 FM +Leg Mount	184	56.1	N/A	TBD	INITIAL	1	1/2"OD	–	EMO
8	1	2 BAY FM: 3'Tx2"W X 2'L	178.5	54.4	N/A	TBD	INITIAL	1	1-5/8"OD	–	IIC FM
9	3	(**) Panel 72x12x6" Leg Mounted	153	46.6	0°/90°/270°	TBD	INITIAL	3	1/2"OD	–	GOV
10	1	20' Omni +Face Mount	143	43.6	OMNI	TBD	INITIAL	1	7/8"OD	–	BMOC
11	1	PARAGRID: 18"Tx3'W – LEG MOUNTED	131	39.9	275	TBD	INITIAL	1	1/2"OD	–	IIC FM
12	1	2BAY FM: 2'Tx2'W X 2' L+StandOff	120	36.6	120	TBD	INITIAL	1	7/8"OD	–	IRIE FM
13	1	20' Omni +Face Mount	111	33.8	OMNI	TBD	INITIAL	1	7/8"OD	–	BMOC
14	1	HPCPE-23DW2 +(1)ODU+StandOff	103	31.4	195	TBD	INITIAL	1	3/8"OD	–	CCS/BPS
15	1	SPD2-5-2NS+(1)ODU+StandOff	83	25.3	15	TBD	INITIAL	1	3/8"OD	–	CCS/BPS
16	1	2-ft MW +(1)ODU +StandOff	84.5	25.7	300	TBD	INITIAL	1	3/8" OD	–	CCS/BPS
17	1	SPD2-5 2NS +(1)ODU + StandOff	80	24.4	300	TBD	INITIAL	1	3/8" OD	–	CCS/BPS
18	1	2-ft MW +(1)ODU + StandOff	75.5	23.0	195	TBD	INITIAL	1	3/8" OD	–	CCS/BPS
19	1	AFS-DBG-0360-01 PANEL+StandOff	76	23.2	315	TBD	INITIAL	1	3/8" OD	–	CCS/BPS
20	1	AFS-DBG-0360-01 PANEL+StandOff	73	22.3	50	TBD	INITIAL	1	3/8" OD	–	CCS/BPS
21	1	HPCPE-23DW2 +(1)ODU + StandOff	71	21.6	235	TBD	INITIAL	1	3/8" OD	–	CCS/BPS
22	1	Y4503 + Leg Mount	65	19.8	0	TBD	INITIAL	1	1/2" LDF	–	EMO
23	1	2-ft MW +(1)ODU + StandOff	67.5	20.5M	90	TBD	INITIAL			–	GOV
24	1	VHLP3-6W-DW1 +(2)ODU	63	19.2	315	TBD	INITIAL	4	3/8" OD	–	CCS/BPS
25	1	VHLP4-6W-DW1C + (2)ODU	63	19.2	50	TBD	INITIAL			–	CCS/BPS
26	1	2-ft MW +(1)ODU + StandOff	63	19.2	270	TBD	INITIAL	–	TBD	–	GOV
27	1	VHLP4-6W-DW1C + (2)ODU	58	17.7	235	TBD	INITIAL	4	3/8" OD	–	CCS/BPS
28	1	VLP4-6W DW-1C + (2)ODU	57	17.6	50	TBD	INITIAL			–	CCS/BPS
29	1	3-ft MW +(1)ODU + StandOff	48.5	14.8	50	TBD	INITIAL	1	3/8" LDF	–	BMOC
30	1	3-ft MW +(1)ODU + StandOff	46	14	235	TBD	INITIAL	1	3/8" LDF	–	BMOC
31	1	1-ft Sqr Panel + StandOff	40	12.2	0	TBD	INITIAL	1	TBD	–	ECL

NOTES:

REV.	BY: REV.	BY: CHK.	DESCRIPTION	DATE
A	HM	MA	ISSUE FOR CONSTRUCTION	5 MAY 20
B	ON	MP	REVISED ANTENNA CHART	14 MAY 20

REFERENCE DRAWINGS:

DRAWING NUMBER	DRAWING NUMBER

Trylon

DRAWING NO. 159737.319.0303

CUSTOMER:	SITE:	SCALE:
GOV OF BERMUDA	DEVONSHIRE PARISH	1.000

DATE:	BY:	CHK:	APP:
5 MAY 20	HM	MA	ZA

TITLE: INITIAL ANTENNA CHART

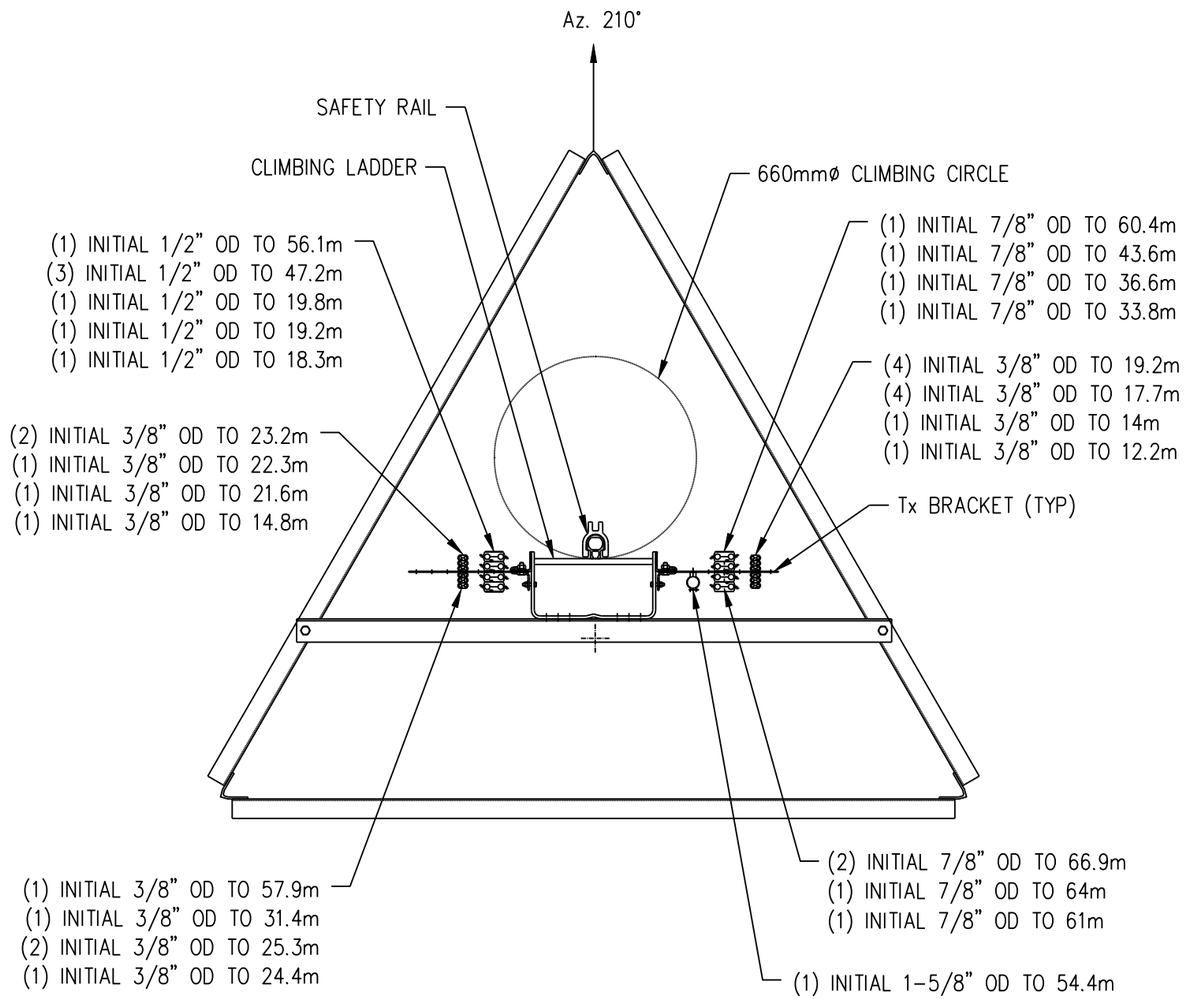

REV.	BY: REV.	BY: CHK.	DESCRIPTION	DATE
A	HM	MA	ISSUE FOR CONSTRUCTION	05 MAY 20

REFERENCE DRAWINGS:

DRAWING NUMBER	DRAWING NUMBER

Trylon

DRAWING NO.
159737.319.0304

NOTES:

CUSTOMER:	SITE:	SCALE:
GOV OF BERMUDA	DEVONSHIRE PARISH	20.000

DATE:	BY:	CHK:	APP:
05 MAY 20	HM	MA	ZA

TITLE:
Tx-LINE LAYOUT

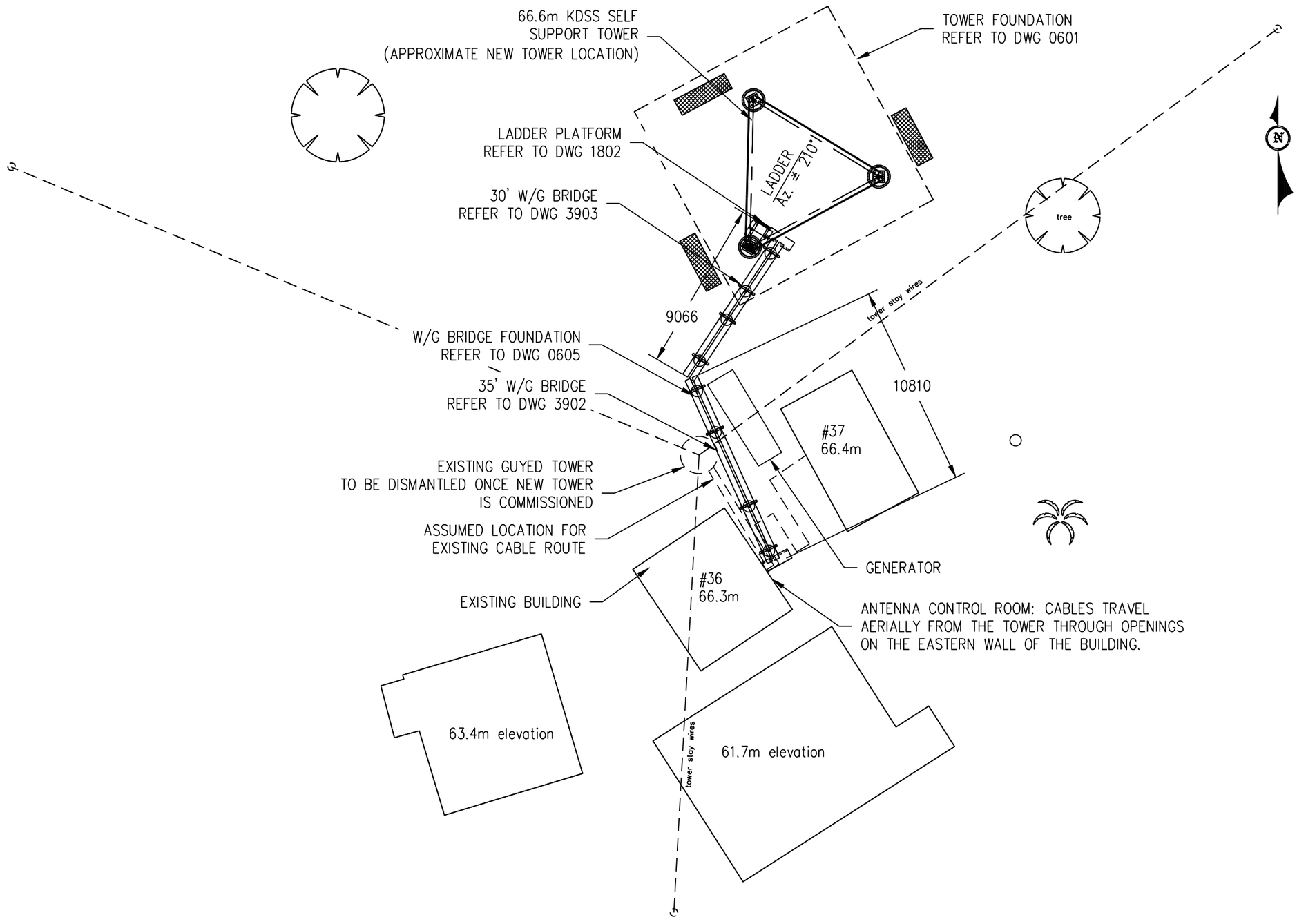

REV.	BY: REV.	BY: CHK.	DESCRIPTION	DATE
A	MA	PS	ISSUE FOR APPROVAL	20 FEB 20
B	HM	MA	ISSUE FOR CONSTRUCTION	05 MAY 20

REFERENCE DRAWINGS:

DRAWING NUMBER	DRAWING NUMBER
0601	
0605	
1802	
3902	
3903	

Trylon

DRAWING NO. 159737.319.0401

NOTES:

CUSTOMER:	SITE:	SCALE:
GOV OF BERMUDA	DEVONSHIRE PARISH	225.000

DATE:	BY:	CHK:	APP:
20 FEB 20	MA	PS	ZA

TITLE: COMPOUND LAYOUT

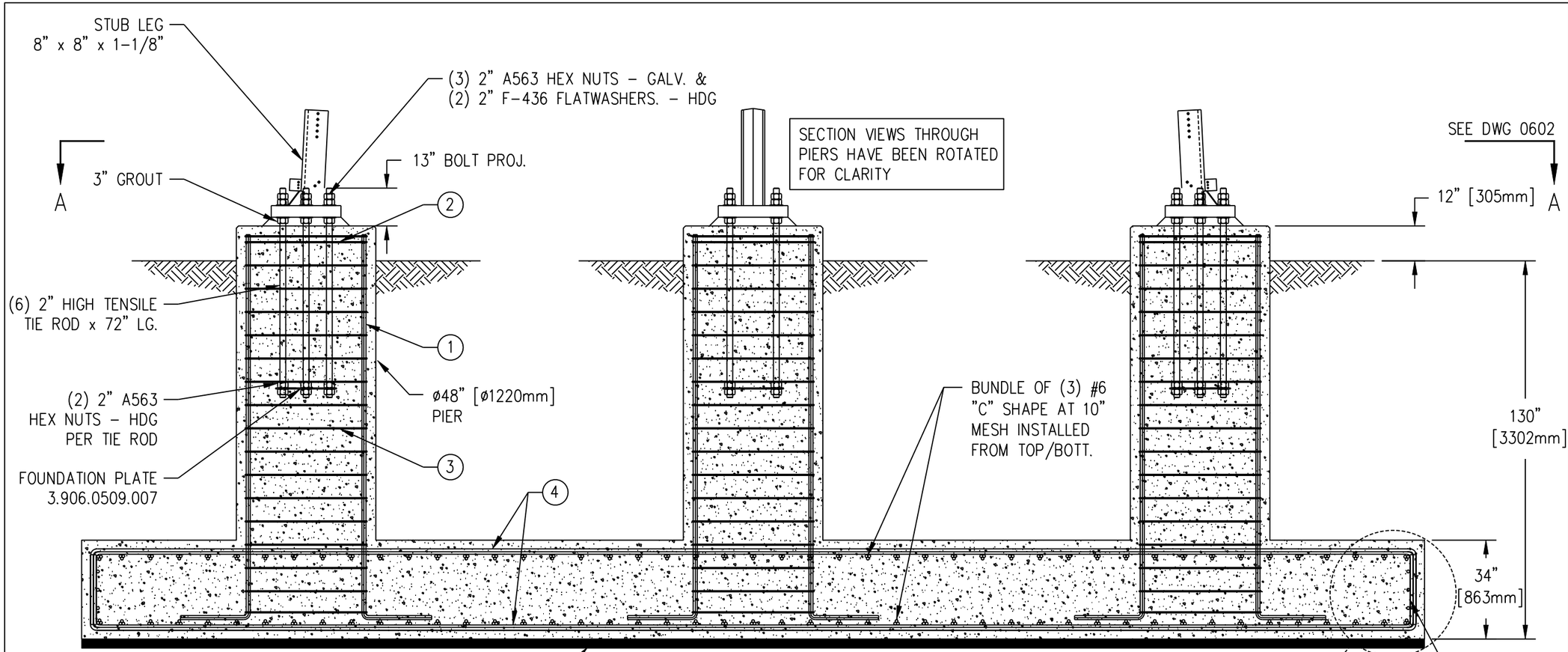

BASE FOUNDATION
(1) REQUIRED

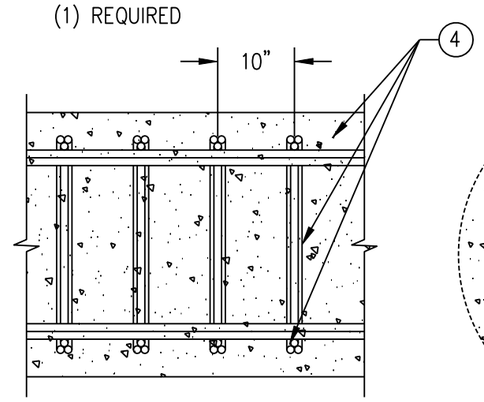

SECTION B-B

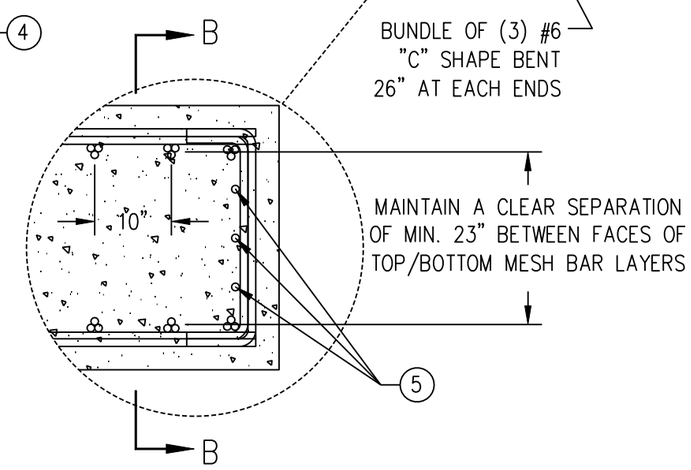

BASE FOUNDATION RE-BAR/TIE SCHEDULE									
PIER DETAILS (SEE NOTE #1)					PAD DETAILS				
ITEM	QTY	SIZE	TYPE	SPACING	ITEM	QTY	SIZE	TYPE	SPACING
1	90	#6	——┘	*	4	141	#6	└┘	**
2	2	#4	◯	2"	5	12	#6	——	6 1/4"
3	16	#4	◯	8"					

NOTES:

1) PIER RE-BAR QUANTITIES LISTED REPRESENTS THE QUANTITY FOR ONE PIER ONLY.
2) '*' - BARS IN BUNDLE OF (3), EQUALLY SPACED,
3) '**' - 564 BARS REQUIRED IN TOTAL, EQUALLY SPACED EACH WAY, TOP & BOTTOM, APPROXIMATE SPACING IS 10". BARS IN BUNDLE OF (3),, EQUALLY SPACED.
4) REFER TO REBAR DRAWING 159737.319.0603 FOR CUTTING LENGTHS AND FABRICATION DETAILS.

NOTES:
1) THE FOUNDATIONS SHALL BE INSPECTED AT ALL CRITICAL STAGES OF THE WORK BY AN ENGINEER OR A QUALIFIED PERSON REPORTING TO THE ENGINEER.
2) REFER TO 0604 DWG FOR FOUNDATION NOTES.

REV.	BY: REV.	BY: CHK.	DESCRIPTION	DATE
A	HM	MA	ISSUE FOR CONSTRUCTION	05 MAY 20

REFERENCE DRAWINGS:

DRAWING NUMBER	DRAWING NUMBER
0602	
0603	

Trylon

DRAWING NO. 159737.319.0601

CUSTOMER:	SITE:	SCALE:
GOV OF BERMUDA	DEVONSHIRE PARISH	40.00

DATE:	BY:	CHK:	APP:
05 MAY 20	HM	MA	ZA

TITLE: TOWER FOUNDATION - ELEV VIEW

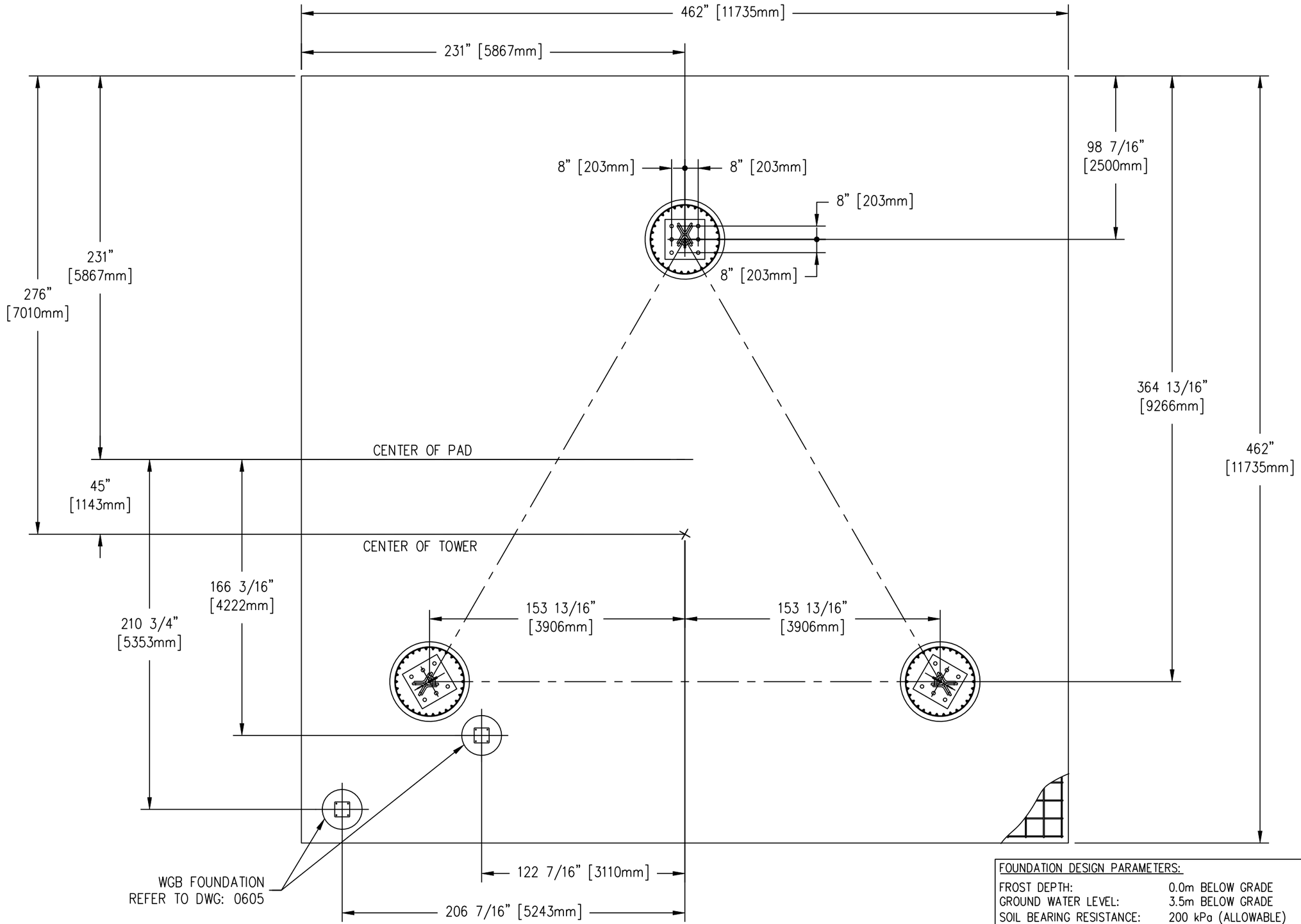

SECTION A–A

FOUNDATION DESIGN PARAMETERS:

FROST DEPTH:	0.0m BELOW GRADE
GROUND WATER LEVEL:	3.5m BELOW GRADE
SOIL BEARING RESISTANCE:	200 kPa (ALLOWABLE)
	400 kPa (ULS)
SOIL DENSITY:	γ =17.3, γ' =7.8 kN/m^3
INTERNAL ANGLE OF FRICTION:	20°
Kp:	2

REV.	BY: REV.	BY: CHK.	DESCRIPTION	DATE
A	HM	MA	ISSUE FOR CONSTRUCTION	05 MAY 20

REFERENCE DRAWINGS:

DRAWING NUMBER	DRAWING NUMBER
0605	

Trylon

DRAWING NO. 159737.319.0602

CUSTOMER:	SITE:	SCALE:
GOV OF BERMUDA	DEVONSHIRE PARISH	60.00

DATE:	BY:	CHK:	APP:
05 MAY 20	HM	MA	ZA

TITLE:

TOWER FOUNDATION – PLAN VIEW

BAR LIST FOR REINFORCING STEEL

ITEM	BAR LOCATION	BAR SIZE	TYPE	TOTAL LENGTH OF BAR (inch)	BENDING DIAGRAM DIM. 'A'	BENDING DIAGRAM DIM. 'B'	BENDING DIAGRAM	QTY. REQ'D	TOTAL BAR WT.
4	TWR PAD	#6	'C' SHAPE	488-1/4"	456"	26"	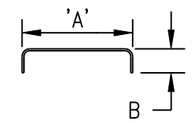	376	22978
	TWR PAD	#6		486"	454-1/4"	25-1/2"		188	11434
1	TWR PIER	#6	BENT	156-7/8"	134-3/4"	24"	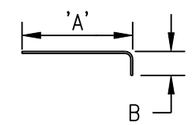	180	3534
	TWR PIER	#6		156-1/8"	134-1/2"	23-1/2"		90	1759
6	WGB PIER	#6		144-7/8"	134-3/4"	12"		36	653
	WGB PIER	#6		144-5/8"	134-1/2"	11-1/2"		12	217
2	TWR PIER	#4	TIE	138-3/8"	42"		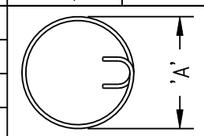 90° HOOKS BOTH ENDS	6	46
3	TWR PIER	#4		138-3/8"	42"			48	370
7	WGB PIER	#4		63"	18"			136	477
			STIRRUP				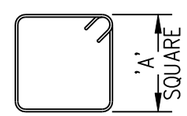 135° HOOKS BOTH ENDS		
5	TWR PAD	#6		456"				12	685
8	WGB PAD	#5	STRAIGHT	48"				72	300
			STRAIGHT						
			STRAIGHT						

SIZES & WEIGHTS		TOTAL BAR WEIGHT (lbs)	42455
METRIC	WT. (Kg/M)		
10M	0.785		
15M	1.570		
20M	2.355		
25M	3.925		
30M	5.495		
35M	7.850		

NOTES:
1) REINFORCING STEEL SHALL BE DEFORMED BARS CONFORMING WITH CSA STANDARD G30.18-M92 GR 400.
2) REJECT BARS WITH KINKS OR BENDS NOT SHOWN ON THIS DRAWING.

REV.	BY: REV.	BY: CHK.	DESCRIPTION	DATE
A	HM	MA	ISSUE FOR CONSTRUCTION	05 MAY 20

REFERENCE DRAWINGS:

DRAWING NUMBER	DRAWING NUMBER

Trylon

DRAWING NO. 159737.319.0603

CUSTOMER: GOV OF BERMUDA | SITE: DEVONSHIRE PARISH | SCALE: 1.00

DATE: 05 MAY 20 | BY: HM | CHK: MA | APP: ZA

TITLE: REBAR CHART

FOUNDATION NOTES:

GENERAL:

1) THE CONTRACTOR SHALL FIELD CHECK ALL DIMENSIONS AND DETAILS BEFORE PROCEEDING WITH THE WORK.
2) ALL WORKMANSHIP SHALL BE IN ACCORDANCE WITH THE LATEST ISSUE OF ACI STANDARDS.
3) FOUNDATIONS DESIGNED IN ACCORDANCE WITH SOILS REPORT:
   COMPANY NAME: BRUNEL ENGINEERING CONSULTANTS
   REPORT NUMBER: 19-103
   REPORT DATED: 27-JAN-2020
4) THE TOWER BASE PAD SHALL BE PLACED AGAINST UNDISTURBED SOIL.

CONCRETE:

1) CONCRETE CONSTRUCTION SHALL CONFORM TO THE REQUIREMENTS OF STANDARD ACI 318-95.
2) CONCRETE SHALL HAVE A MINIMUM COMPRESSIVE STRENGTH AT 28 DAYS OF NOT LESS THAN 4350 PSI [30 MPa].
3) CONCRETE SHALL CONTAIN AN AIR ENTRAINING AGENT. TOTAL AIR CONTENT TO BE 5% TO 7%, FOR THE PARTICULAR SIZE OF AGGREGATE BEING USED. THE AIR ENTRAINING AGENT SHALL BE COMPATIBLE WITH THE WATER REDUCING AGENT. AIR ENTRAINED MAY BE OMITTED IF CONCRETE IS NOT EXPOSED TO FREEZING AND THAWING CYCLES.
4) THE MAXIMUM SIZE OF COARSE AGGREGATE SHALL BE 3/4".
5) THE USE OF CALCIUM CHLORIDE OR ACCELERATING ADMIXTURES IS PROHIBITED.
6) SLUMP SHALL BE 3" +/- 1".
7) IF THE AIR TEMPERATURE IS 41 DEGREES F OR LESS, THE TEMPERATURE OF THE CONCRETE AT TIME OF PLACING, SHALL BE BETWEEN 59 AND 86 DEGREES F.
8) CHAMFER EXPOSED CORNERS OF CONCRETE (APPROX 3/4").
9) PROVIDE EFFECTIVE MEANS OF MAINTAINING THE TEMPERATURE OF CONCRETE IN PLACE AT A MINIMUM OF 50 DEGREES C AND A MAXIMUM OF 86 DEGREES F FOR THREE DAYS AFTER PLACING. WHEN THE MEAN DAILY AIR TEMPERATURE IS LESS THAN 41 DEGREES F PROVIDE PROTECTION FOR NEWLY PLACED CONCRETE BY MEANS OF SUITABLE ENCLOSURES OR RAISED COVERINGS, HEAT AND INSULATION.
10) ALL GROUT SHALL BE NON-FERROUS AND NON SHRINK WITH A MINIMUM COMPRESSIVE STRENGTH OF 5000 PSI AT 28 DAYS, EDGES GROUT SHALL BE TAPERED OFF AT 45°.
11) ALL CONCRETE TO BE TYPE 10 NORMAL PORTLAND CEMENT.

REINFORCEMENT:

1) CLEAN REINFORCEMENT OF ANY LOOSE SCALE, DIRT OR OTHER COATINGS WHICH WOULD DESTROY OR REDUCE BONDING. REJECT BARS WITH KINKS OR BENDS NOT SHOWN ON THIS DRAWING.
2) ALL REINFORCEMENT SHALL HAVE A MINIMUM OF 3" CONCRETE COVER.
3) REINFORCING STEEL SHALL BE DEFORMED BARS CONFORMING WITH ASTM A615 (GRADE 60) (BLACK OR GALVANIZED STEEL)

BACKFILLING:

1) BACKFILL SHALL BE PLACED IN THIN LIFTS (MAXIMUM 6") AND COMPACTED TO A MINIMUM OF 95 PERCENT OF STANDARD PROCTOR MAXIMUM DRY DENSITY. IN THE EVENT THAT EXCAVATED MATERIALS ARE NOT SUITABLE FOR BACKFILL, IT SHALL BE THE RESPONSIBILITY OF THE CONTRACTOR TO SUPPLY AND COMPACT SUITABLE CLEAN MATERIAL TO MEET THAT REQUIREMENT.

STANDARDS:

1) FOUNDATIONS AND ANCHORS DESIGNED IN ACCORDANCE WITH TIA 222-H.
2) CONCRETE WORK IN ACCORDANCE WITH ACI 318-95.
3) REINFORCEMENT FOR CONCRETE IN ACCORDANCE WITH ACI 318-95.

NOTES:

REV.	BY: REV.	BY: CHK.	DESCRIPTION	DATE
A	HM	MA	ISSUE FOR CONSTRUCTION	05 MAY 20

REFERENCE DRAWINGS:

DRAWING NUMBER	DRAWING NUMBER

Trylon

DRAWING NO. 159737.319.0604

CUSTOMER:	SITE:	SCALE:
GOV OF BERMUDA	DEVONSHIRE PARISH	1.00

DATE:	BY:	CHK:	APP:
05 MAY 20	HM	MA	ZA

TITLE: FOUNDATION NOTES

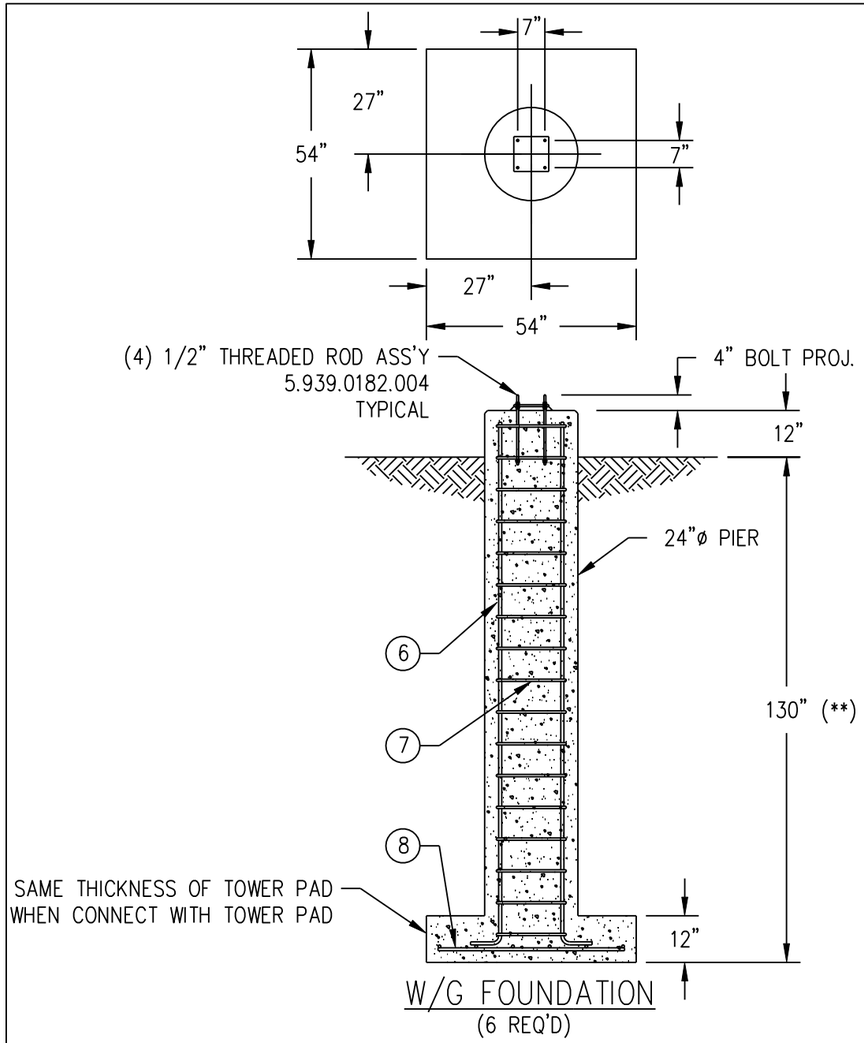

W/G FOUNDATION
(6 REQ'D)

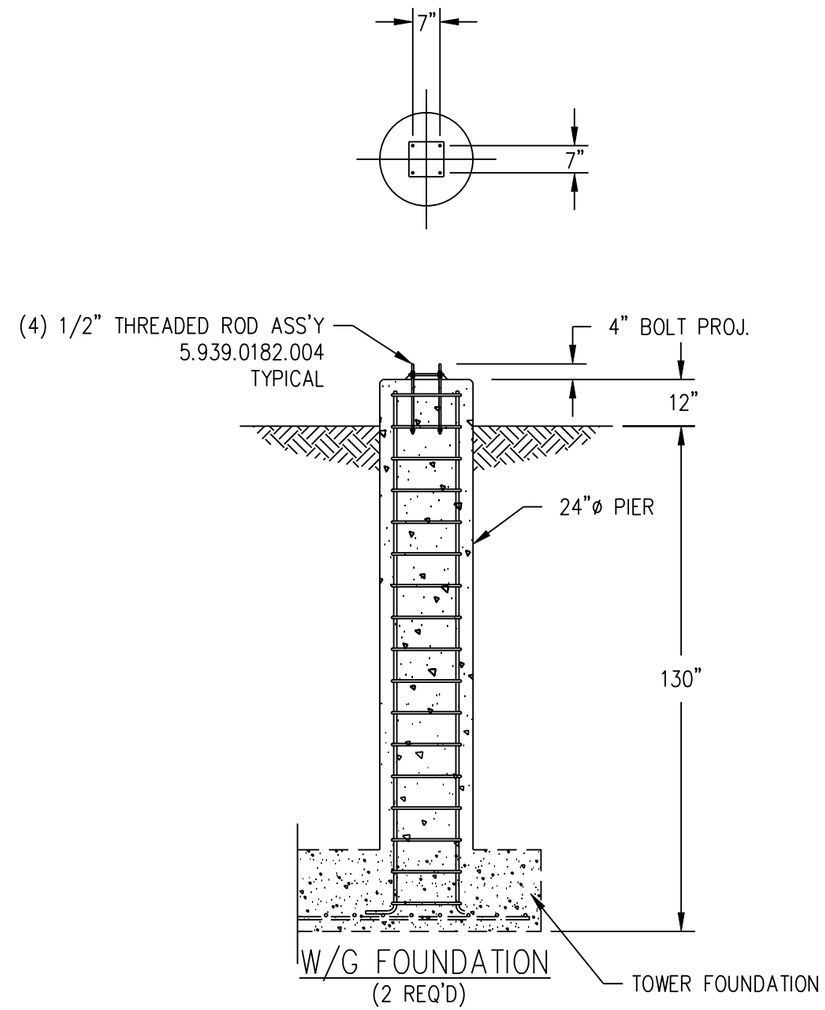

W/G FOUNDATION
(2 REQ'D)

W/G FOUNDATION RE-BAR/TIE SCHEDULE									
PIER DETAILS					PAD DETAILS				
ITEM	QTY	SIZE	TYPE	SPACING	ITEM	QTY	SIZE	TYPE	SPACING
6	6	#6		EQUAL	8	6	#5		*
7	17	#4	◯	EQUAL					

NOTES:

1) QUANTITIES LISTED REPRESENTS THE QUANTITY FOR ONE FOUNDATION ONLY.
2) '*' – 12 BARS REQUIRED IN TOTAL, EQUALLY SPACED EACH WAY, APPROXIMATE SPACING IS 8"
3) REFER TO REBAR DRAWING 159737.319.0603 FOR CUTTING LENGTHS AND FABRICATION DETAILS.

W/G FOUNDATION RE-BAR/TIE SCHEDULE								
PIER DETAILS					PAD DETAILS			
ITEM	QTY	SIZE	TYPE	SPACING	QTY	SIZE	TYPE	SPACING
6	6	#6		EQUAL				
7	17	#4	◯	EQUAL				

NOTES:

1) QUANTITIES LISTED REPRESENTS THE QUANTITY FOR ONE FOUNDATION ONLY.
2) REFER TO REBAR DRAWING 159737.319.0603 FOR CUTTING LENGTHS AND FABRICATION DETAILS.

NOTES:

1) REFER TO DWG 0604 FOR FOUNDATION NOTES
1) '**' – FOR PIERS AWAY FROM THE EXCAVATION AREA OF TOWER FOUNDATION, THE DEPTH OF W/G FOUNDATION CAN REDUCED TO 60" BELOW GRADE

REV.	BY: REV.	BY: CHK.	DESCRIPTION	DATE
A	HM	MA	ISSUE FOR CONSTRUCTION	05 MAY 20

REFERENCE DRAWINGS:

DRAWING NUMBER	DRAWING NUMBER
0603	
0604	

Trylon

DRAWING NO.
159737.319.0605

CUSTOMER:	SITE:	SCALE:
GOV OF BERMUDA	DEVONSHIRE PARISH	40.00

DATE:	BY:	CHK:	APP:
05 MAY 20	HM	MA	ZA

TITLE:
WGB FOUNDATION

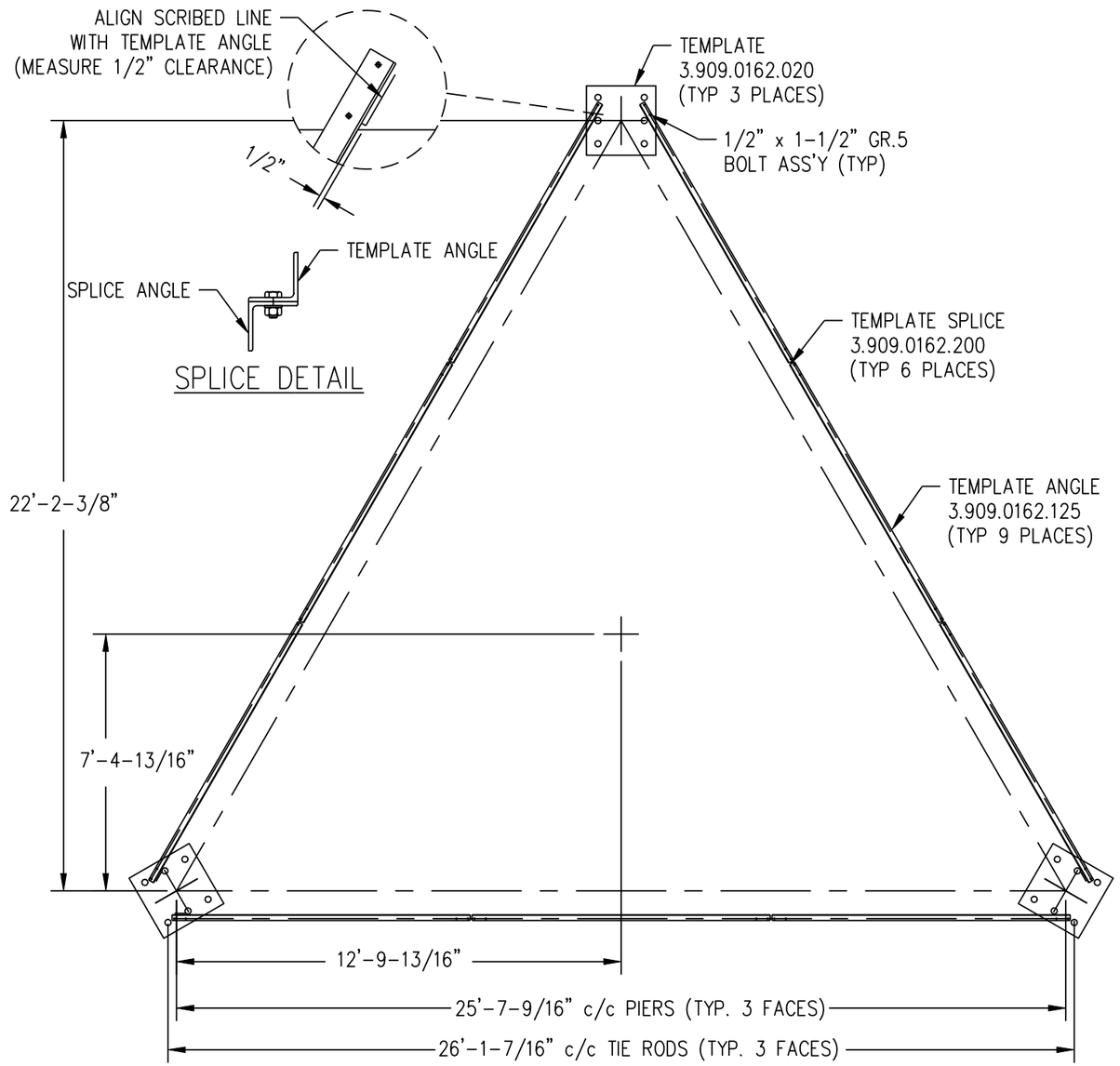

REV.	BY: REV.	BY: CHK.	DESCRIPTION	DATE
A	MA	PS	ISSUE FOR APPROVAL	20 FEB 20
B	HM	MA	ISSUE FOR CONSTRUCTION	05 MAY 20

SECTION: 26' -0"
LEG: V 8"x8"x1-1/8"

REFERENCE DRAWINGS:

DRAWING NUMBER	DRAWING NUMBER

Trylon

DRAWING NO.
159737.319.0901

NOTES: 1) FOUNDATION CONTRACTOR TO VERIFY ALL DIMENSIONS PRIOR TO POURING CONCRETE.

CUSTOMER:	SITE:	SCALE:
GOV OF BERMUDA	DEVONSHIRE PARISH	50.000

DATE:	BY:	CHK:	APP:
20 FEB 20	MA	PS	ZA

TITLE:
TEMPLATE ASSEMBLY

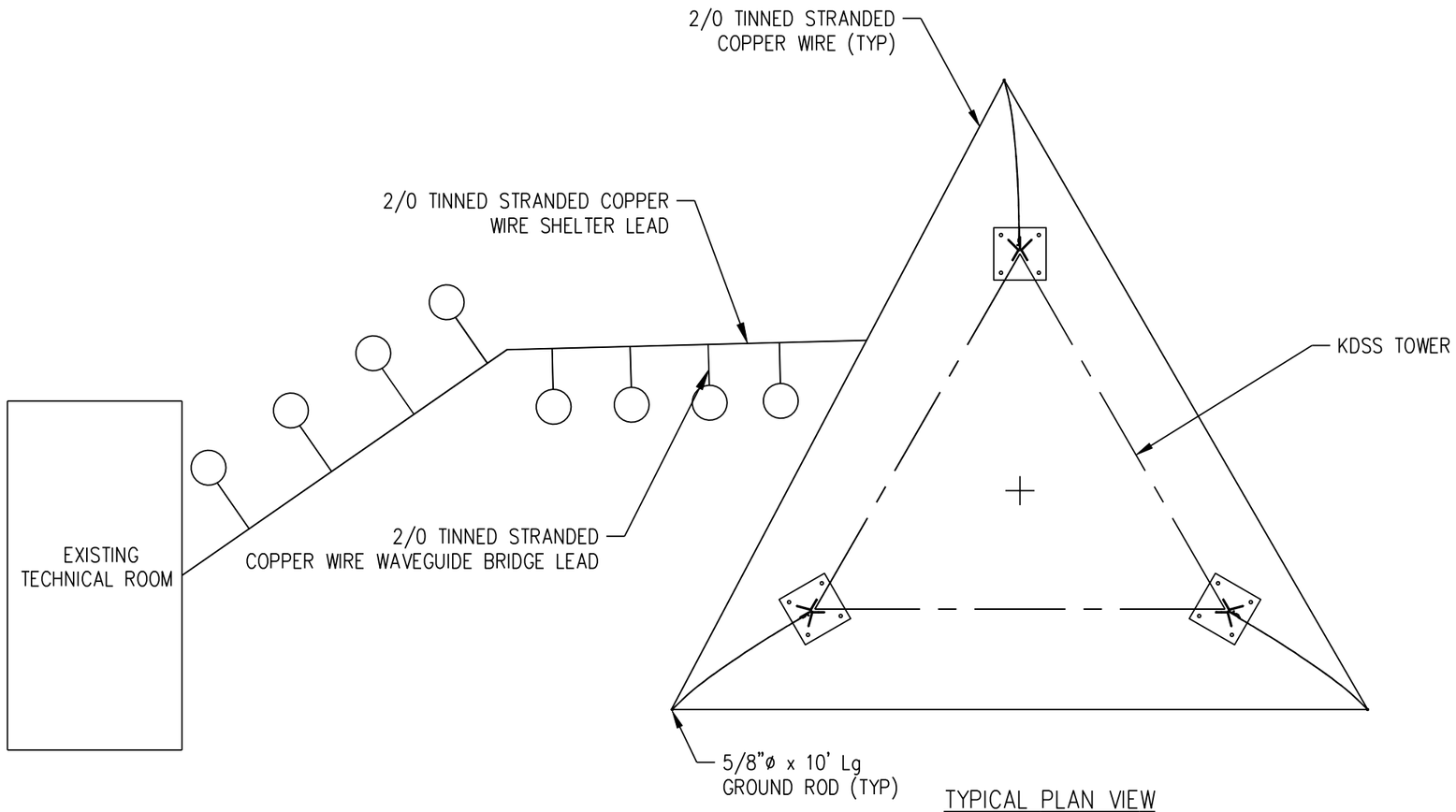

TYPICAL PLAN VIEW

REV.	BY: REV.	BY: CHK.	DESCRIPTION	DATE
A	MA	PS	ISSUE FOR APPROVAL	20 FEB 20
B	HM	MA	ISSUE FOR CONSTRUCTION	5 MAY 20
C	ON	MP	REVISED ACCORDING CLIENT COMMENTS	14 MAY 20

ALL GROUNDING WIRES INCLUDED IN GROUNDING KITS.

REFERENCE DRAWINGS:

DRAWING NUMBER	DRAWING NUMBER
1202	
1203	
1204	
1205	
1206	
1207	

Trylon

DRAWING NO. 159737.319.1201

CUSTOMER:	SITE:	SCALE:
GOV OF BERMUDA	DEVONSHIRE PARISH	25.000

DATE:	BY:	CHK:	APP:
20 FEB 20	MA	PS	ZA

TITLE: GROUNDING DETAILS

NOTES:
1) REFER TO DWG 1202 FOR TOWER ELEVATION VIEW
2) INSTALL COPPER BUSS BAR AT TOWER BASE. REFER TO DWG 1207 FOR DETAILS.
3) REFER TO DWG 1203 FOR GENERAL GROUNDING DETAILS.
4) REFER TO DWG 1205 FOR GROUNDING NOTES.

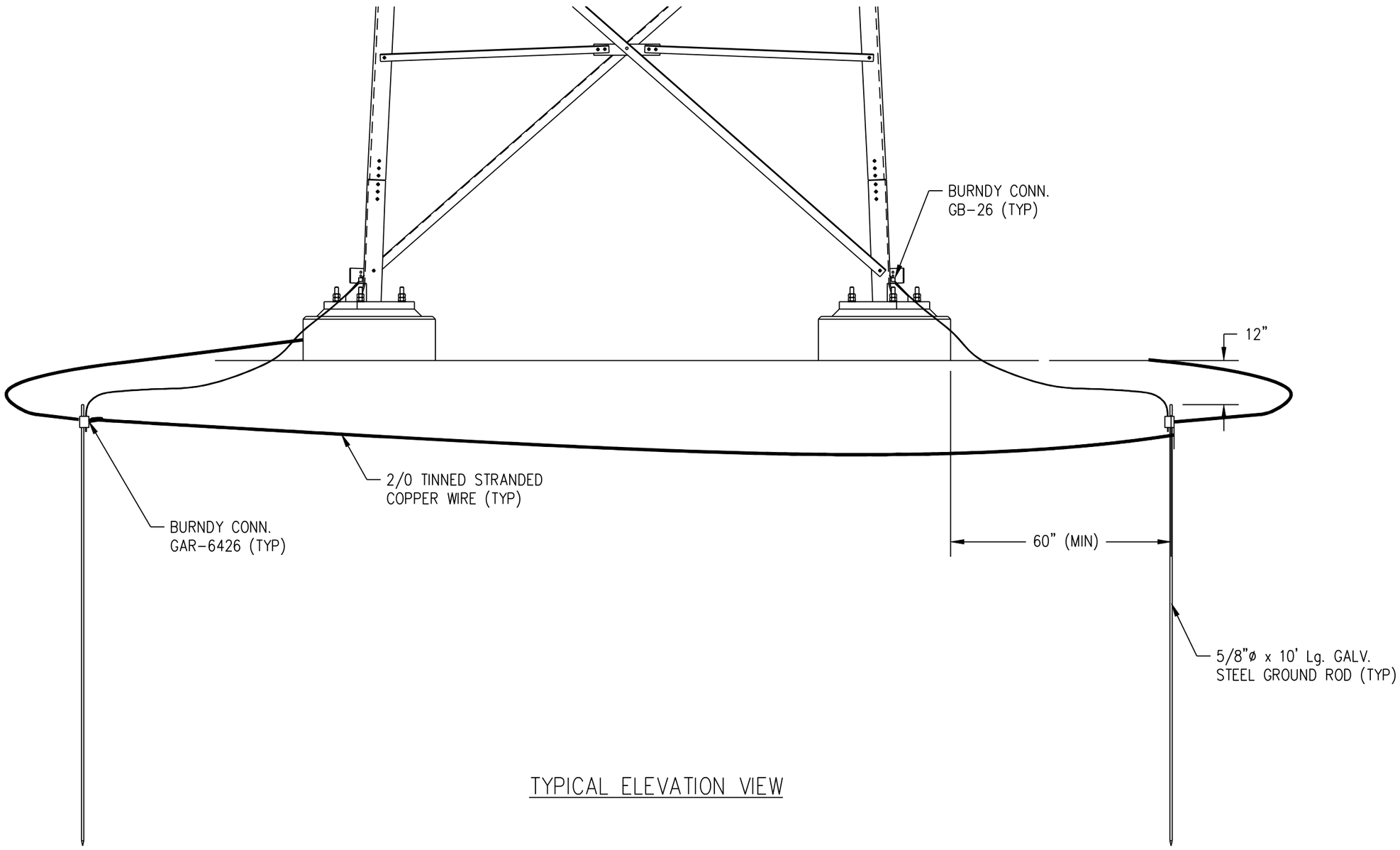

TYPICAL ELEVATION VIEW

NOTES:

REV.	BY: REV.	BY: CHK.	DESCRIPTION	DATE
A	MA	PS	ISSUE FOR APPROVAL	20 FEB 20
B	HM	MA	ISSUE FOR CONSTRUCTION	05 MAY 20

REFERENCE DRAWINGS:

DRAWING NUMBER	DRAWING NUMBER

Trylon

DRAWING NO.
159737.319.1202

CUSTOMER:	SITE:	SCALE:
GOV OF BERMUDA	DEVONSHIRE PARISH	30.000

DATE:	BY:	CHK:	APP:
20 FEB 20	MA	PS	ZA

TITLE:
GROUNDING DETAILS

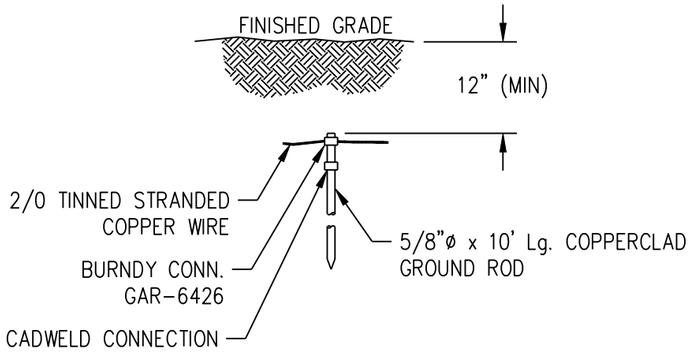

GROUND ROD DETAIL

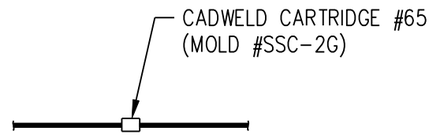

WIRE TO WIRE SPLICE

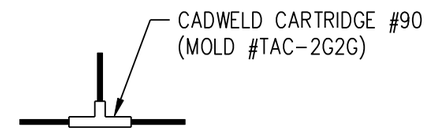

'T' CONNECTION

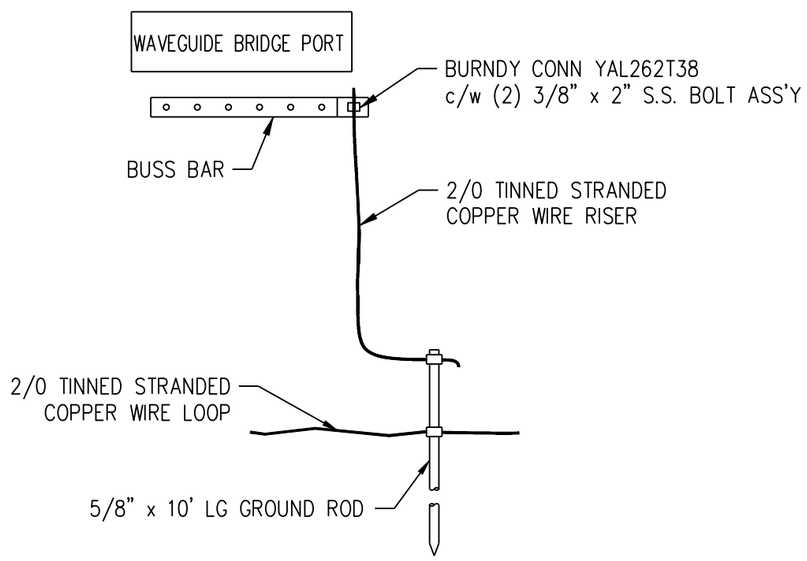

WAVEGUIDE BRIDGE GROUNDING @ PORT

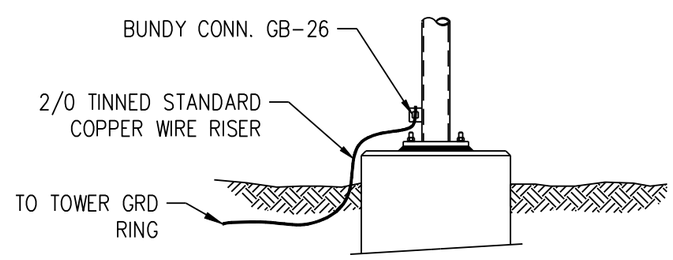

TYPICAL WAVEGUIDE BRIDGE POST

REV.	BY: REV.	BY: CHK.	DESCRIPTION	DATE
A	MA	PS	ISSUE FOR APPROVAL	20 FEB 20
B	HM	MA	ISSUE FOR CONSTRUCTION	05 MAY 20
C	ON	MP	REVISED ACCORDING CLIENTS COMMENTS	15 MAY 20

REFERENCE DRAWINGS:

DRAWING NUMBER	DRAWING NUMBER

Trylon

DRAWING NO. 159737.319.1203

NOTES:

CUSTOMER:	SITE:	SCALE:
GOV OF BERMUDA	DEVONSHIRE PARISH	30.000

DATE:	BY:	CHK:	APP:
20 FEB 20	MA	PS	ZA

TITLE: GROUNDING DETAILS

	LOCATION	FORMULA	LENGTH OF WIRE 2/0 TINNED COPPER
BELOW GRADE	TOWER LOOP	(FACE WIDTH x 3) + ((((PIER DIA. + 10') x 3.1415)	218'
BELOW GRADE	TOWER LOOP TO SHELTER LOOP	(DISTANCE + 10') x N. OF LOCATIONS	65'
BELOW GRADE	TOWER LEAD	15' x No. OF LOCATIONS	45'
BELOW GRADE	WGB LEAD	15' x No. OF LOCATIONS	120'
		SUB TOTAL	448'
		GRAND TOTAL (ADD 5% TO SUB TOTAL)	470' [143.4M]

NOTES:

REV.	BY: REV.	BY: CHK.	DESCRIPTION	DATE
A	MA	PS	ISSUE FOR APPROVAL	20 FEB 20
B	HM	MA	ISSUE FOR CONSTRUCTION	05 MAY 20

REFERENCE DRAWINGS:

DRAWING NUMBER	DRAWING NUMBER

Trylon

DRAWING NO.
159737.319.1204

CUSTOMER:	SITE:	SCALE:
GOV OF BERMUDA	DEVONSHIRE PARISH	1.000

DATE:	BY:	CHK:	APP:
20 FEB 20	MA	PS	ZA

TITLE:
GROUND WIRE CUTTING CHART

REV.	BY: REV.	BY: CHK.	DESCRIPTION	DATE
A	MA	PS	ISSUE FOR APPROVAL	20 FEB 20
B	HM	MA	ISSUE FOR CONSTRUCTION	05 MAY 20

NOTES:

1) ALL GROUND WIRE TO BE 2/0 TINNED STRANDED COPPER WIRE.
2) ALL GROUND RODS ARE TO BE PLACED A MINIMUM OF 5'-0" AND MAXIMUM OF 7'-0" FROM THE TOWER BASE.
3) ALL GROUND RODS TO BE 5/8"ø x 10'-0" Lg. GALVANIZED STEEL.
4) GROUND WIRE TO BE BURIED 1'-0" BELOW GROUND SURFACE.
5) ALL GROUNDING CONNECTIONS ARE TO BE CLEAN AND FREE OF PAINT AT THEIR MATING SURFACES.
6) GROUNDING WIRES MUST ALWAYS BE CONTINUOUS AND TRAVEL IN A "DOWNWARD" DIRECTION FREE FROM SHARP BENDS OR SUDDEN CHANGES IN DIRECTIONS.
7) IDEAL SITE GROUNDING SYSTEM RESISTANCE = 5 OHMS (MAXIMUM OF 50 OHMS).

REFERENCE DRAWINGS:

DRAWING NUMBER	DRAWING NUMBER

Trylon

DRAWING NO.
159737.319.1205

NOTES:

CUSTOMER:	SITE:	SCALE:
GOV OF BERMUDA	DEVONSHIRE PARISH	1.000

DATE:	BY:	CHK:	APP:
20 FEB 20	MA	PS	ZA

TITLE:
GROUNDING NOTES

BILL OF MATERIAL REPORT

Job Number :159737-Tower Supply, 220ft Tapered KDSS / Painted

LotID	Part ID	Rev	Description	Ext Qty	UM	Ext Weight	UM
1	**9.906.1**		**BELOW GRADE FOUNDATION MATERIAL**				
	3.906.0509.007	B	FOUNDATION PLATE (18-2" TIE ROD)	3	EA	77.70	LB
	4.906.9000.603		2" X 72" HIGH TENS TIE ROD ASS'Y	18	EA		
	3.906.9000.603	A	2" X 72" HIGH TENS TIE ROD FULL THD	18	EA	1065.60	LB
			B8S HIGH TENSILE TIE RODS *90 KSI YIELD MIN.* *120 KSI ULTIMATE MIN.* *FULL GALV.*				
	1202190		2" A563 DH HEX NUT (6 T.P.I.) - HDG	90	EA	251.46	LB
	1202221		2" F-436 FLAT WASHER - HDG	36	EA	13.46	LB

Page Sub Total Weight (not 5.)	1,408.22
Page Sub Total Weight (5.)	0.00
Page Sub Total Weight	1,408.22

LotID	Part ID	Rev	Description	Ext Qty	UM	Ext Weight	UM
1	**9.909.1**		**FOUNDATION TEMPLATE MATERIAL**				
	4.909.0250.001		SA19.0026 - (12) 2" TIE RODS	1	EA		
			26'-0" SECTION *25'-7-9/16" c/c PIERS* *MODIFIED*				
	3.909.0162.020	C	TEMPLATE (18-2" TIE ROD)	3	EA	91.80	LB
	3.909.0162.200	A	TEMPLATE SPLICE ANGLE	6	EA	30.60	LB
	3.909.0162.125	A	TEMPLATE ANGLE (V8" - 26' SECTION)	9	EA	189.00	LB
	1201132		1/2" X 1-1/2"HEX HEAD BOLT GR.5-HDG RACK	38	EA	4.67	LB
	1201120		1/2" HEX NUT GR. 5 - HDG RACK	38	EA	1.36	LB
	1201121		1/2" LOCK WASHER GR. 5 - HDG RACK	38	EA	0.38	LB
			Page Sub Total Weight (not 5.)		317.82		
			Page Sub Total Weight (5.)		0.00		
			Page Sub Total Weight		317.82		

LotID	Part ID	Rev	Description	Ext Qty	UM	Ext Weight	UM
1	**9.912.1**		**BELOW GRADE GROUNDING MATERIAL**				
	4.91.0103.004		BASIC EIA GROUNDING	1	EA		
		MODIFIED					
	3.912.0006.002	A	5/8" X 10' GROUND ROD	3	EA	31.50	LB
	1301201		2/0 TINNED S.C.WIRE	108	M	145.80	LB
	1303030		GAR 6426 BURNDY	3	EA	1.85	LB
	1302023		#90 CADWELD CARTRIDGE	4	EA	0.86	LB
	1302022		#65 CADWELD CARTRIDGE	4	EA	0.60	LB
		ORDER IN QTY'S OF 20 BURNDY					
	1301201		2/0 TINNED S.C.WIRE	35	M	47.25	LB
			Page Sub Total Weight (not 5.)		227.86		
			Page Sub Total Weight (5.)		0.00		
			Page Sub Total Weight		227.86		

LotID	Part ID	Rev	Description	Ext Qty	UM	Ext Weight	UM
1	**9.963.1**		**MISC. MATERIALS - BELOW GRADE**				
	9.963.2		CIVIL INSTALLATION DRAWINGS	1	EA		

Page Sub Total Weight (not 5.)	0.00
Page Sub Total Weight (5.)	0.00
Page Sub Total Weight	0.00